Neonixie 6 Digit Nixie Clock Controller v1.0 - Schematic

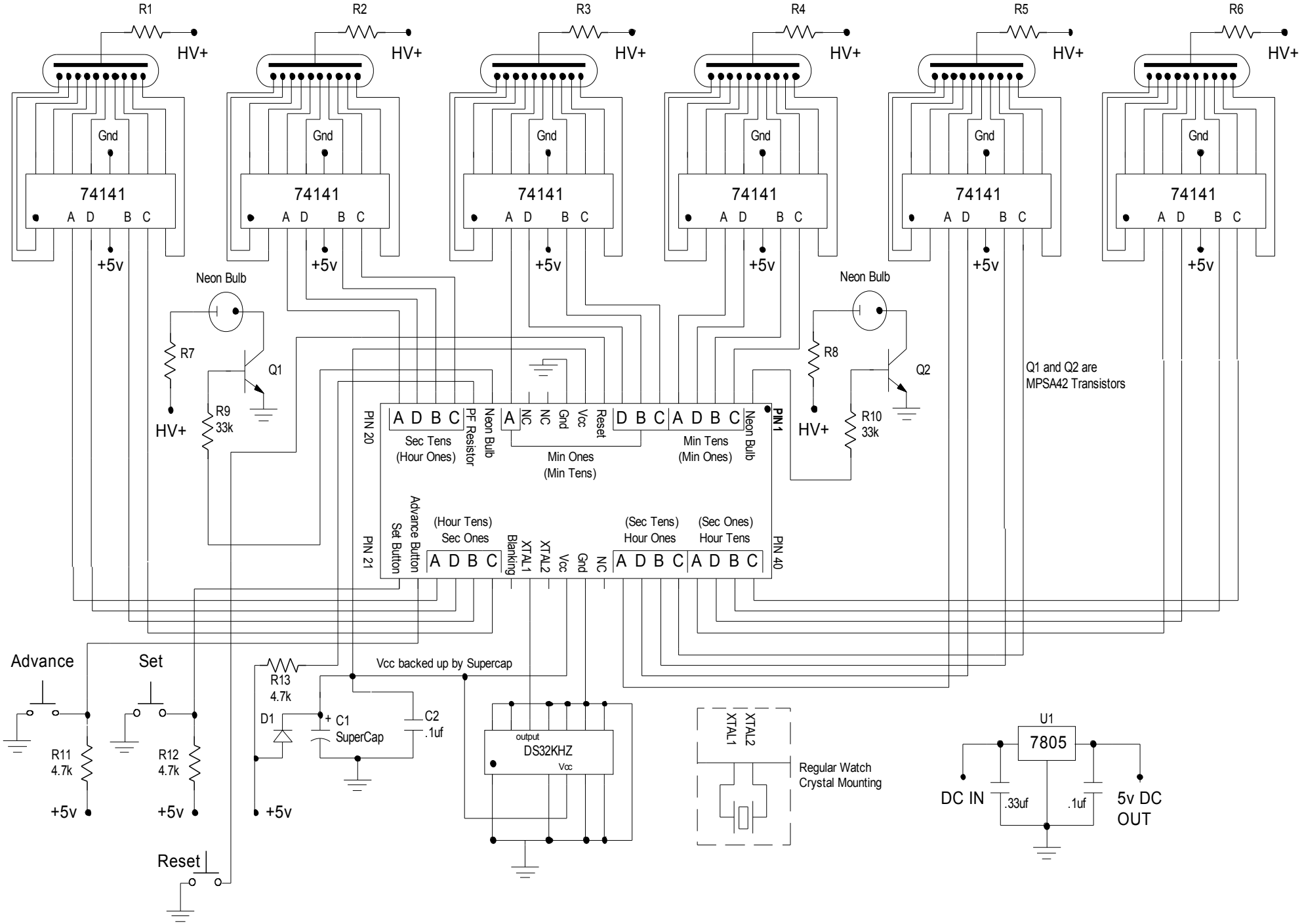

Copyright © 2006 Neonixie www.neonixie.com nixietubes@neonixie.com